ICCP Amstel 2 FA

Range 8V to 60V 15A to 100A <1500W

The Amstel 2 Type C is a compact and robust switch mode power supply, forced cooled, specifically designed for cathodic protection. Standard SCADA RS485 MODBUS fieldbus.

The Amstel Rectifier is Voltage and Current constant. The rectifier can be parameterized by the AM software RS485 or RS232, and optionally parameterized using three push buttons by menu structure. The parameters can be protected by a PIN code to prevent unauthorized personnel to change settings.

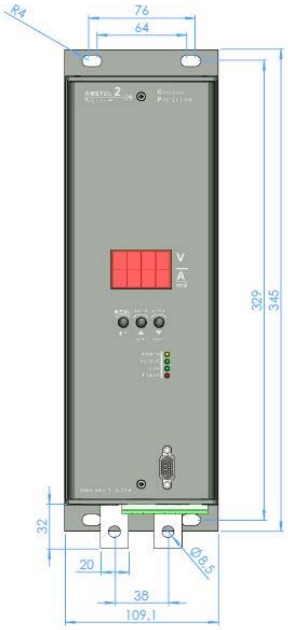

Types

Voltage	8V	12V	16V	20V	25V	30V	40V	50V	60V
Current									
15A	●	●	●	●	●	●	●	●	●
20A	●	●	●	●	●	●	●	●	●
25A	●	●	●	●	●	●	●	●	
40A	●	●	●	●	●	●			
50A	●	●	●	●	●				
60A	●	●	●	●					
80A	●	●	●						
100A	●	●							

Features

- Aux. supply: 190V...265V.
- Line Power supply specified by customer: 200V/208V/220/340V/380V/400V/415V/440V/480V.
- Modbus over RS485.
- RTU and ASCII protocol. 1200...115.200 baud (19.200 baud default).
- Contact failure detection.
- Auto low voltage at no load.
- Alarms on over-current, over-voltage.

Control and Display Panel

- Display actual Current & Voltage display
- Optional Menu
- Status Leds
  - Power LED
  - Output Active LED
  - Communication LED
  - Error LED
- RS232 DB9 female

Connection panel

Power connector
Aux. power 190Vac..265Vac 1ph
Main power 3ph

Fieldbus
RS485 half duplex MODBUS

Input / Output
Actual Uout and Iout 0-60mVdc
Digital potential free output contact
2x Digital inputs and 1x digital output

DC output
Plus terminal M8 hole for cable lug
Min terminal M8 hole for cable lug
Fuse for the auxiliary power supply
Standard air out, optional reversed airflow.

CORROCONSULT UK LTD
THE KIOSK, OVERLEY, TELFORD
SHROPSHIRE, ENGLAND, TF6 5HD.
TEL: +44 (0)1952 740234 FAX: +44 (0)1952 740412

TECHNICAL DATASHEET

AMSTEL TR UNIT & ENCLOSEURE

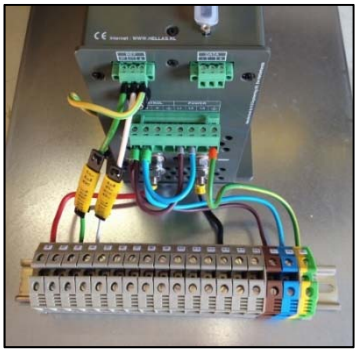

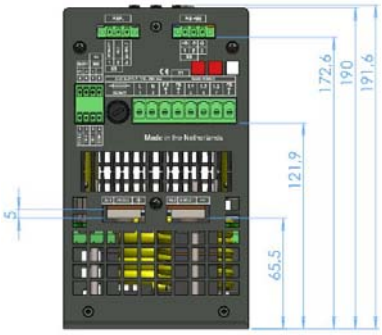

Specifications

Item	Minimal	Nominal	Maximal	Unit
Environment temperature	-20	20	35	oC
Relative humidity	10	60	90	%
Height			192	mm
Width Horizonal version			144	
Width Vertical version			105	
Length Horizontal version			338	
Length Vertical version			345	
Weight	5		7	
Electrical				
Line voltage [AC] depending on type	-5%	Line Voltage	10%	V
Max output power (depending on type)			1500	W
Standby power incl.		2		W
Input fuse 5x20mm Slow		1.6		A
Accuracy		<0.2 %		%

PDN

PDN = AM2F-(DC Voltage)V-(DC Current)A-3-400V-C(Options)

Example

Amstel 2 20V 25A Forced cooled 3ph 400Vac with modbus and Menu

AM2F-20V-25A-3-400V-CRS1M1

Options

AF1

Reverse air flow, bottom to top direction....

M1

Menu controlled with push buttons on top....

PU1

Cathodic protection Timer option....

RF1

Cathodic protection potential controlled on ON value reference cell can be any type as long the lim...

RF2

Cathodic protection potential controlled on OFF value reference cell can be any type as long the lim...

RF3

Cathodic protection potential controlled on ON and OFF value reference cell can be any type as long...

RS1

RS485 Modbus RTU/ASCII open protocol easy to integrate with SCADA or other controls PLC etc....

TB1

Vertical mounting holes Top and Bottom...

US1

USB parameterization option

CORROCONSULT UK LTD
THE KIOSK, OVERLEY, TELFORD
SHROPSHIRE, ENGLAND, TF6 5HD.
TEL: +44 (0)1952 740234 FAX: +44 (0)1952 740412

Marina Wall Mounting Enclosues

External Dimensions

H 600mm x W 400mm x D 257mm

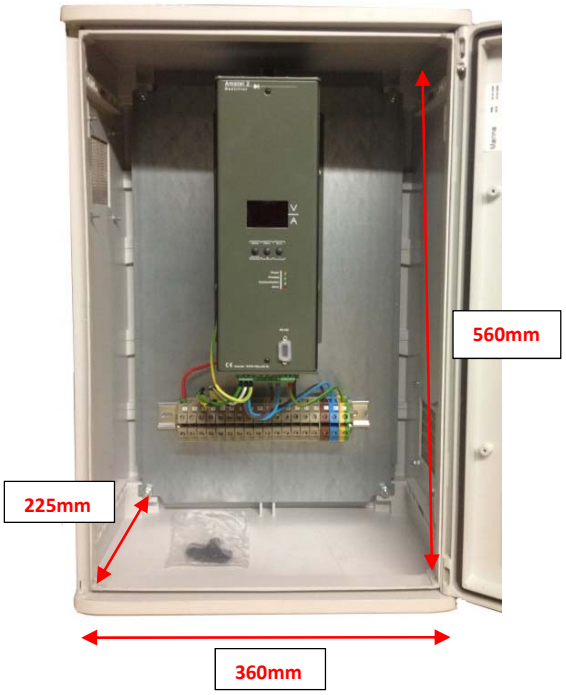

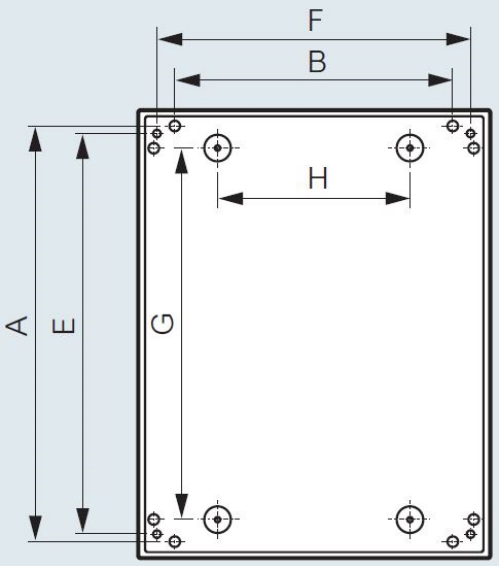

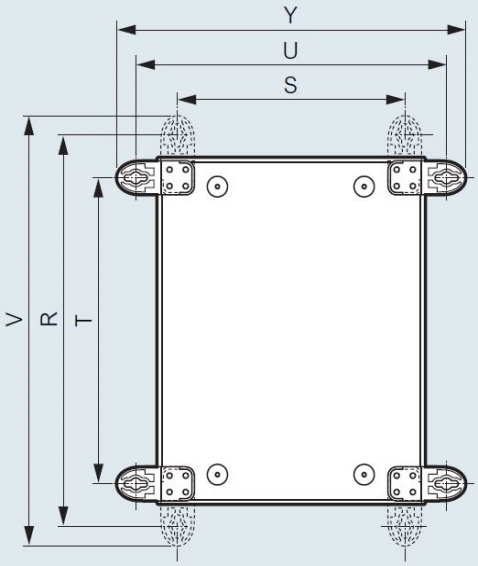

Cat. Nos.	On Stand Cat No. 0364 36 and by threaded rods (mm)		Direct fixing outside mounting equipment area and on stand (mm)		Direct fixing through rear of enclosure (mm)		With vertical brackets (mm)			With horizontal brackets (mm)		
	A	B	E	F	G	H	R	S	V	T	U	Y
0362 /55/75	574	318	558	358	525	220	680	341	735	551	470	525

CORROCONSULT UK LTD
THE KIOSK, OVERLEY, TELFORD
SHROPSHIRE, ENGLAND, TF6 5HD.
TEL: +44 (0)1952 740234 FAX: +44 (0)1952 740412